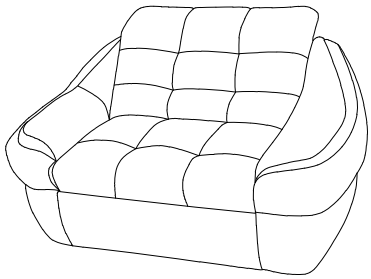

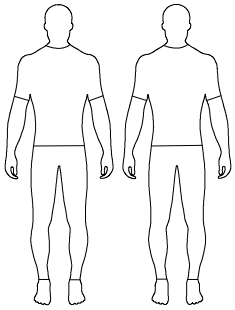

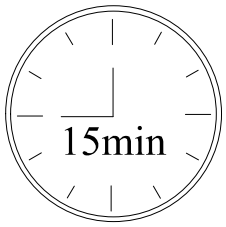

A	B
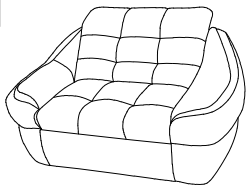 1x	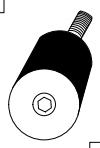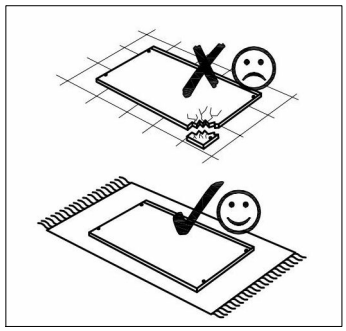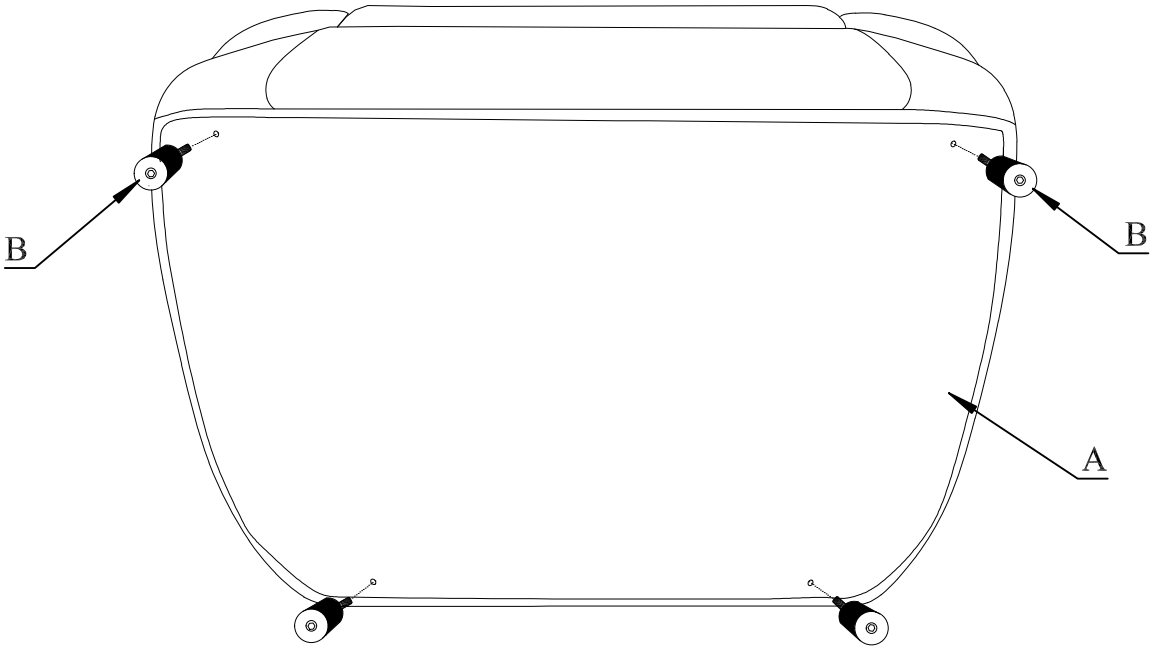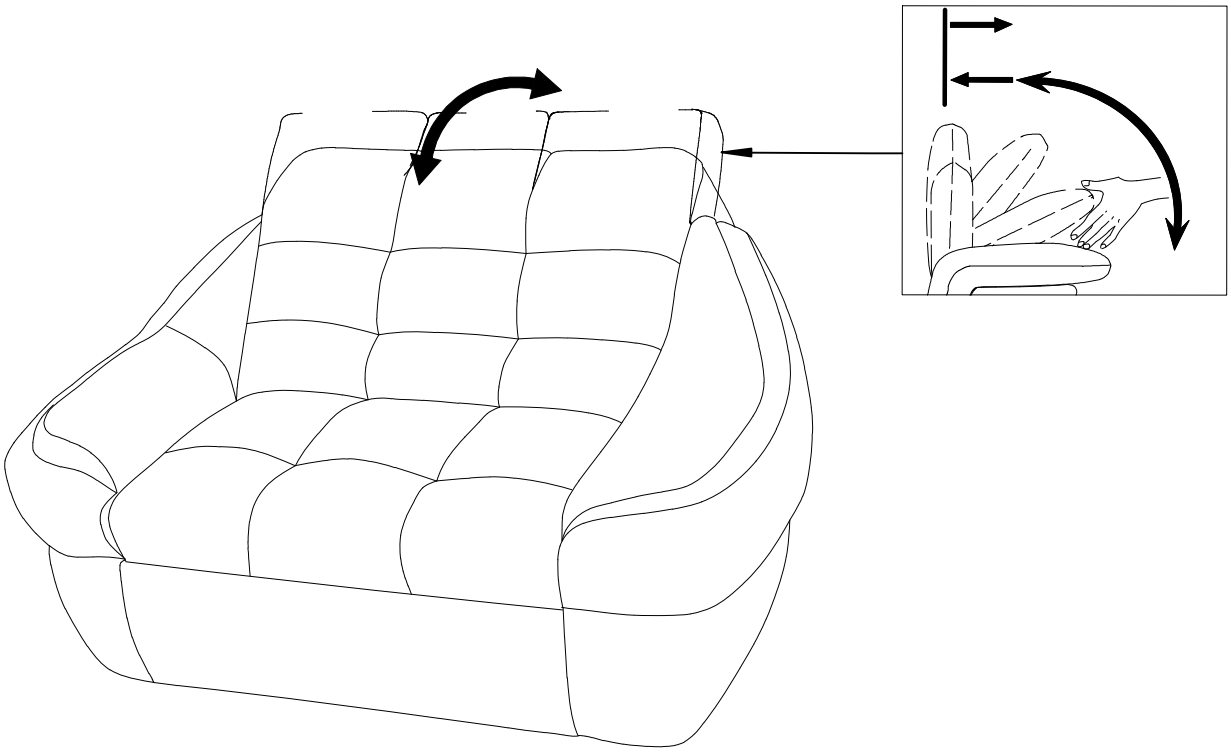 4x
	H-50